SOLEFFECT
13009 Los Nietos Road | Santa Fe Springs CA, 90670
PH 323.275.9945 | FX 323.607.8881

Manual Apex Roller Shade
Wall Mount Detail

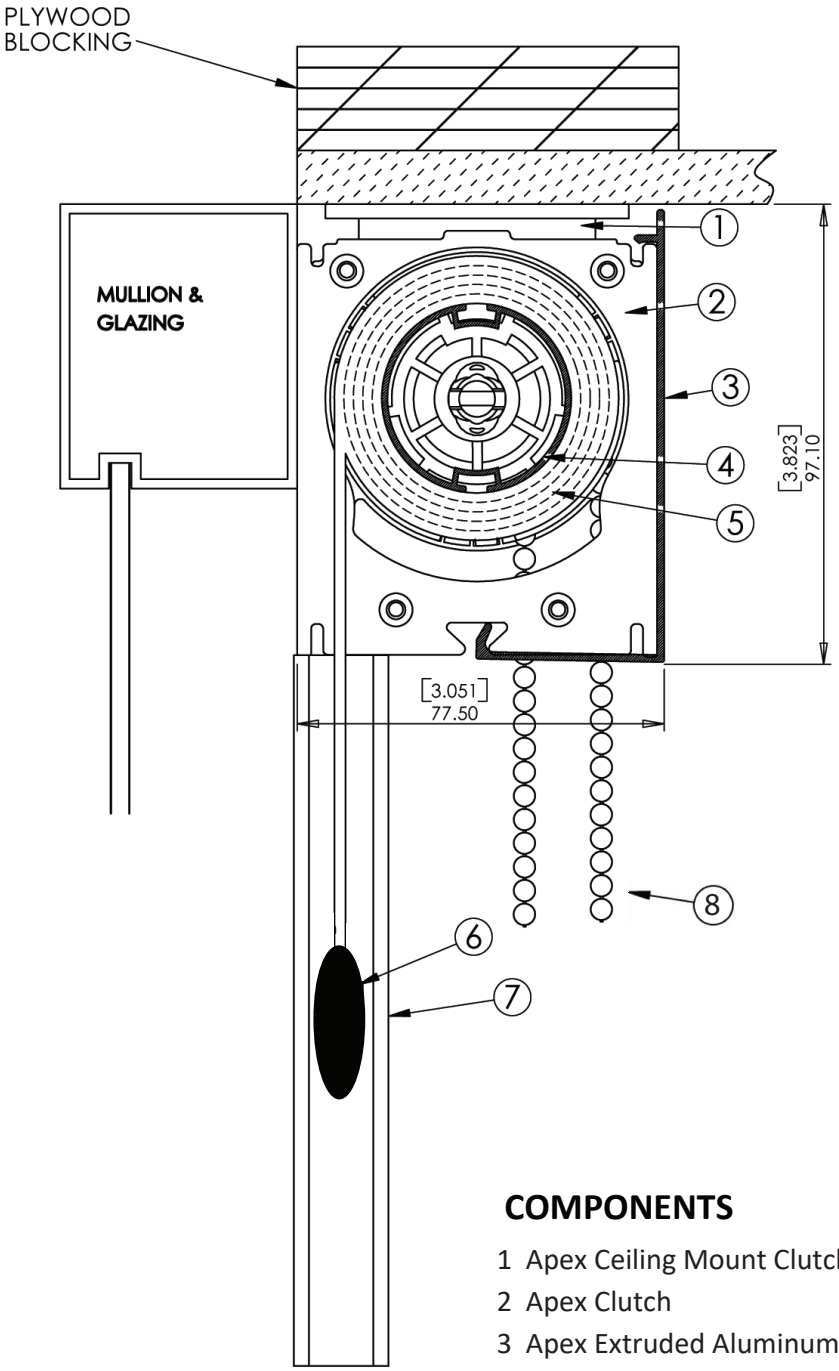

COMPONENTS

1 Apex Ceiling Mount Clutch Bracket
2 Apex Clutch
3 Apex Extruded Aluminum Fascia (Optional)
4 Aluminum Tube
5 Fabric
6 Sealed Pocket Hembar
7 Side Channel (Optional)
8 Stainless Steel Chain

Fascia needs to be notched for this application.